TY170-GSXXY

17" Intel® Core™ 3-14th i3/i5/i7 & N97/N100 Processor Industrial Panel PC



Features:

- 17" Intel® Processor Core™ 3-14th Gen i3/i5/i7 & N-series N97/N100
- Industrial display screen, multi point capacitive touch screen
- 2*SO-DIMM DDR4
- 2*USB 3.0+2*USB 2.0
- 1*RS232

Optional additional 3*RS232/485/422 on TOP(Max 2*RS485 or 1*RS485+1*RS422)

- 1*HD/1*VGA/2*RJ45/2*Audio
- Fanless design

Specifications:

System Hardware

CPU	Intel® Processor Core™ 3-14th Gen i3/i5/i7 & N-series N97/N100	Memory	2*SO-DIMM DDR4
		Storage	MSATA/ M.2 2280 SATA/NVME SSD (optional 128/256/512GB/1T/2T/4T)
Watchdog	0-255 seconds/grading implemented through system software		

Display

LCD Type	17″	Luminance	300 cd/m²
Max. Resolution	1280*1024	Contrast Ratio	1000: 1
Touchscreen Type	17" Multi point capacitive touch screen		

OS

OS	Windows 10/11、 Ubuntu

I/O Ports

USB	2*USB3.0, 2*USB2.0 (Optinoal more USBs)	Audio	1*Line out, 1*MIC in
Serial port	1*RS232	Video	1*HDMI，1*VGA
	Optional additional 3*RS232/485/422 on TOP (Max 2*RS485 or 1*RS485+1*RS422)	Expansion Slot	**Optional** dual band WIFI/BT, **Optional** 4G/5G communication
LAN	2*1Gbe RJ45	SIM Card	**Optional** with 4G/5G
GPIO	**Customizable**		

Power

Power Input	Standard Phoenix terminal(**Optional** Auto power on & 9-36V wide voltage input)

Environment

Vibration Protection	5-17Hz/1.0mm amplitude; 17-200Hz/1.0g acceleration	Operating Temp.	-10℃～60℃, Surface air flow
		Storage Temp.	-20℃～70℃
Shock Protection	10g acceleration, 11ms cycle	Humidity	95% @ 40℃, no condensation
Reliability	MTBF ≥ 30000h; MTTR ≤ 0.5h	IP Rating	Front panel IP65

Mechanical

Dimension (WxHxD)	398mm*323.6mm*53.2mm	Material	All metal fanless design
Weight	4.6kg/5.1kg(N.W./G.W.)	Mounting	VESA Installation: 75*75mm/100*100mm
Color	Black		Embedded Installation: 384mm*314mm

Dimensions:

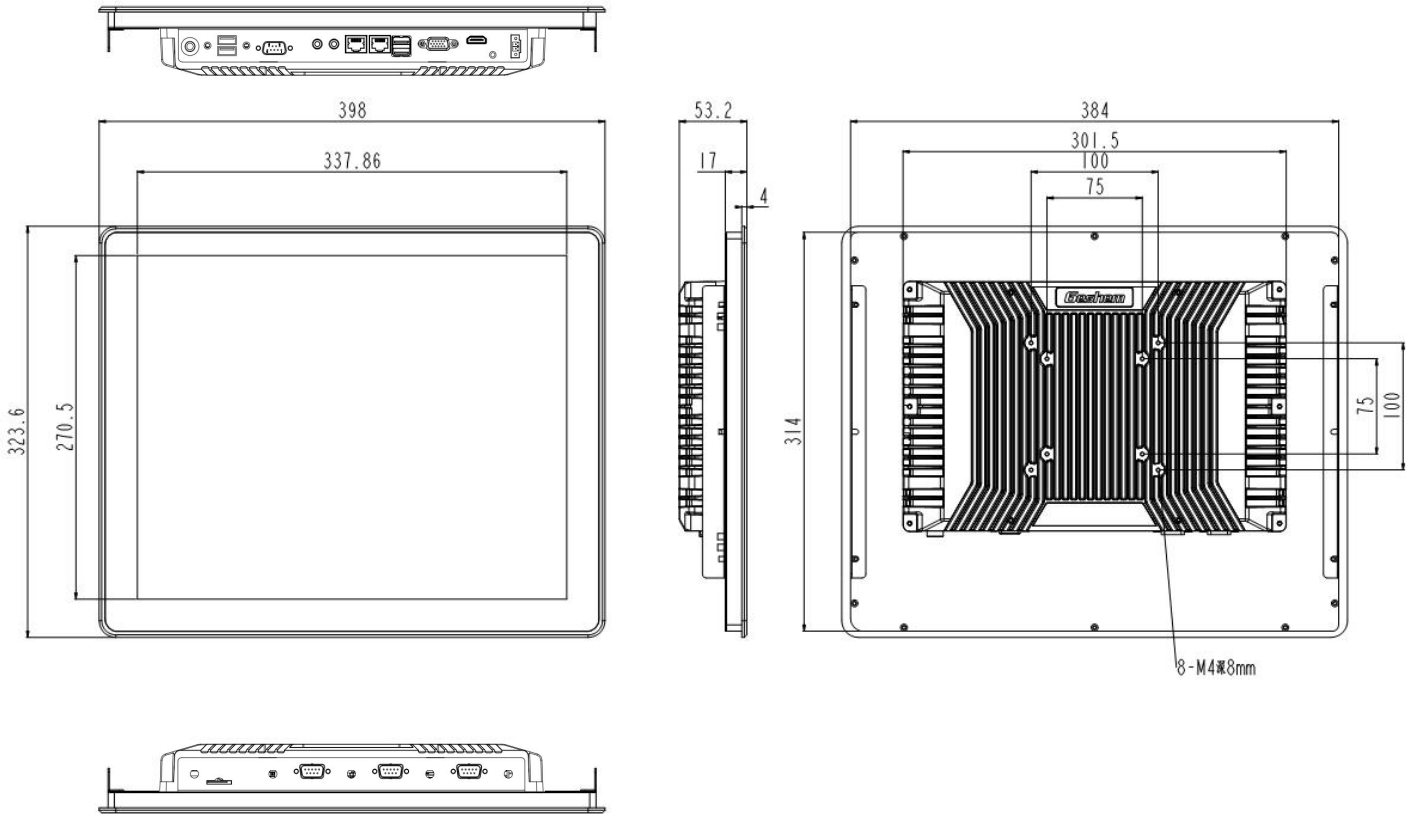

Ordering Information:

<table>
<tr><th>Model</th><th>CPU</th><th>RAM</th><th>Storage SSD</th><th>Ethernet</th><th>Notes</th></tr>
<tr><td>TY170-GS51Y</td><td>J1900</td><td>1*DDR3L
Max 8GB</td><td>1*MSATA</td><td rowspan="4">2*RTL8111H</td><td rowspan="23">The CPU may change
based
on the market.
Please consult the sales
for
the specific CPU before
placing the order</td></tr>
<tr><td>TY170-GS53Y</td><td>J6412</td><td rowspan="3">1*DDR4
MAX 16GB</td><td rowspan="3">Only MSATA
/M.2 NVME</td></tr>
<tr><td>TY170-GSN97Y</td><td>N97</td></tr>
<tr><td>TY170-
GSN100Y</td><td>N100</td></tr>
<tr><td>TY170-GS35Y</td><td>I5-3210M</td><td>1*DDR3L
Max 8GB</td><td rowspan="4">1*MSATA</td><td rowspan="4">2*RTL8111H</td></tr>
<tr><td>TY170-GS45Y</td><td>I5-4300U</td><td>1*DDR3L
Max 8GB</td></tr>
<tr><td>TY170-GS65Y</td><td>i5-6300U</td><td>2*DDR4
Max 32GB</td></tr>
<tr><td>TY170-GS65Y2</td><td>i5-6300U</td><td>2*DDR3L
MAX 16GB</td></tr>
<tr><td>TY170-GS67Y</td><td>i7-6500U</td><td rowspan="3">2*DDR4
Max 32GB</td><td rowspan="8">1*mSATA
1*M.2 2280
Supports
NVMe/SATA
adaptive</td><td rowspan="2">2*Intel I210AT</td></tr>
<tr><td>TY170-GS75Y</td><td>i5-7300U</td></tr>
<tr><td>TY170-GS77Y</td><td>i7-7600U</td><td rowspan="7">2*RTL8111H</td></tr>
<tr><td>TY170-GS85Y</td><td>i5-8265U</td><td rowspan="10">2*DDR4
Max 64GB</td></tr>
<tr><td>TY170-GS87Y</td><td>i7-8565U</td></tr>
<tr><td>TY170-GS103Y</td><td>i3-10110U</td></tr>
<tr><td>TY170-GS105Y</td><td>i5-10310U</td></tr>
<tr><td>TY170-GS107Y</td><td>i7-10710U</td></tr>
<tr><td>TY170-GS115Y</td><td>i5-1135G7</td><td rowspan="2">1* M.2 2280
Supports
NVMe/SATA
adaptive</td><td>2*Intel I210</td></tr>
<tr><td>TY170-GS117Y</td><td>i7-1195G7</td><td>2*Intel I226V</td></tr>
<tr><td>TY170-GS123Y</td><td>i3-1215U</td><td rowspan="4">1* M.2 2280
Only supports NVMe</td><td>Only 1*Intel I226V</td></tr>
<tr><td>TY170-GS125Y</td><td>i5-1235U</td><td rowspan="2">2*Intel I226V</td></tr>
<tr><td>TY170-GS127Y</td><td>i7-1255U</td></tr>
<tr><td>TY170-
GS125HY</td><td>Ultra 125H</td><td>2*RTL8111H</td></tr>
</table>